S0550 SERIES 3 OR 4 SPEED "HI TORQUE" GEARBOX [MANUAL SHIFT]

180 HP MAXIMUM
6500 IN. LBS. MAXIMUM INPUT TORQUE
AT 1800 RPM INPUT
SERVICE CLASS ONE
APPROX. SHIP WT. = 1125 LBS.

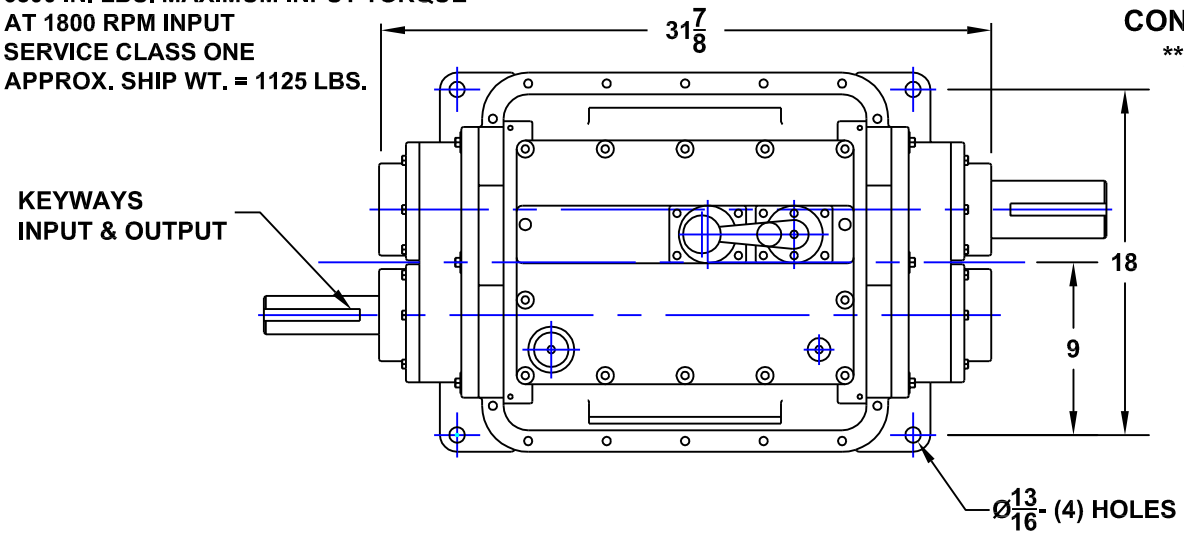

CONTACT SALES REPRESENTATIVE @ 1-800-689-3400
ALL DAS SERIES UNITS ARE CUSTOM DESIGNED

- OVERHUNG LOAD CAN EFFECT HP RATING
- SHAFT DESIGN CAN EFFECT HP RATING
- BI-DIRECTIONAL ROTATION
- AVAILABLE AS A REDUCER OR INCREASER
- INPUT AND OUTPUT SHAFTS ROTATE IN THE OPPOSITE DIRECTION
- INPUT SHAFT CAN BE INSTALLED ON LEFT SIDE OF OUTPUT SHAFT (OPPOSITE ASSEMBLY)
- UNITS MUST BE STOPPED BEFORE SHIFTING
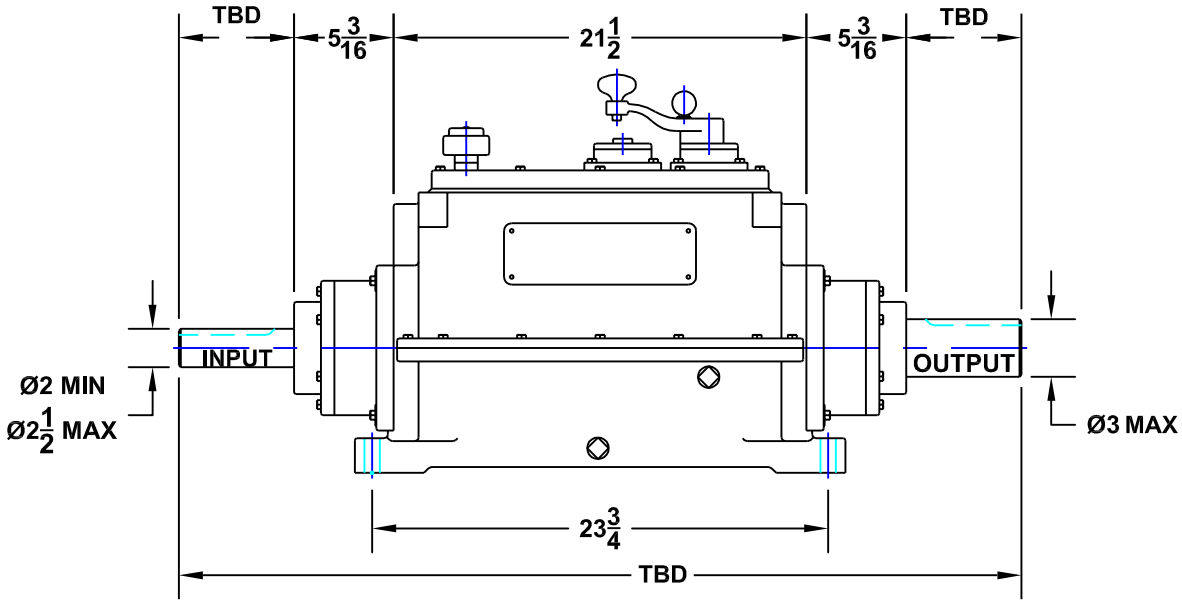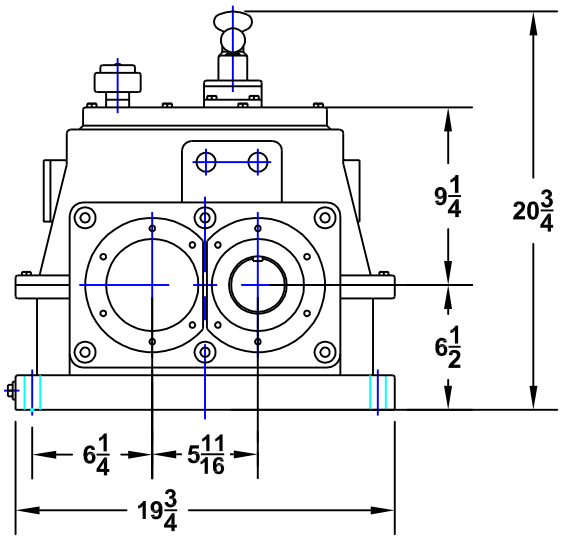
ONE YEAR LIMITED WARRANTY